APlus®

UPS SYSTEMS

USER MANUAL

PlusIII-6KLRB / PlusIII-10KLRB

1. Safety Instructions

Please read the FOLLOWING user manual and the safety instructions before installing the unit and starting it up!

1.1 Transport

★Please transport the UPS system only in the original packaging (to protect against shock and impact).

1.2 Set-up

★Condensation may occur if the UPS system is moved directly from a cold to a warm environment. The UPS system must be absolutely dry before being installed. Please allow an acclimatization time of at least two hours.

★Do not install the UPS system near water or in damp environments.

★Do not install the UPS system where it would be exposed to direct sunlight or near heat.

★Do not block off ventilation openings in the UPS system's housing.

1.3 Installation

★Do not connect appliances or items of equipment which would overload the UPS system (e.g. laser printers) to the UPS outlet socket

★Place cables in such a way that no one can step on or trip overthem.

★Do not connect domestic appliances such as hair dryers to UPS output sockets.

★The UPS can be operated by any individuals with no previous experience

◇Installation for Plus III-6KLRB / Plus III-10KLRB

★**Warning:** This is a product for restricted sales distribution to informed partners. Installation restrictions or additional measures may be needed to prevent disturbances'.

★A readily accessible disconnect device shall be incorporated in the buildinginstallation wiringand must be close to the UPS system.

★This is permanently connected equipment and only qualified maintenance personnel may carry out installations.

1.4 Operation

★Do not disconnect the mains cable on the UPS system or the building wiring socket outlet (shockproof socket outlet) during operations since this would cancel the protective earthing of the UPS system and of all connected loads.

★The UPS system features its own, internal current source (batteries). The UPS outputsockets or output terminals block may be electrically lived even if the UPS system is not connected to the building wiring socket outlet.

★In order to fully disconnect the UPS system, first press the Standby switch then disconnect the mains lead

★Ensure that no fluids or other foreign objects can enter the UPS system.

★The UPS operates with hazardous voltages. Only qualifiedmaintenance personnel may carry

1.5 Maintenance, servicing and faults

★ The UPS system operates with hazardous voltages. Repairsmay be carried out only by qualified maintenance personnel.

★ Caution -risk of electric shock. Even after the unit is disconnected from the mains power supply (building wiring socket outlet), components inside the UPS system are still connected to the battery and are still electrically live and dangerous.

★ Before carrying out any kind of servicing and/or maintenance, disconnect the batteries and verify that no current is presentand no hazardous voltage exist in the terminals of high capability capacitor such as BUS-capacitors.

★ Only persons are adequately familiar with batteries and with the required precautionary measures may replace batteries and supervise operations. Unauthorised persons must be kept well away from the batteries.

★ Caution -risk of electric shock. The battery circuit is not isolated from the input voltage. Hazardous voltages may occur between the battery terminals and the ground. Before touching, please verify that no voltage is present!

★ Batteries may cause electric shock and have a high short-circuit current. Pleasetake the precautionary measures specified below and any other measures necessary when working with batteries:

- remove wristwatches, rings and other metal objects
- use only tools with insulated grips and handles.

★ When changing batteries, install the same number and same type of batteries.

★ Do not attempt to dispose of batteries by burning them. This could cause battery explosion.

★ Do not open or destroy batteries. Escaping electrolyte can cause injuryto the skinand eyes. It may be toxic.

★ Please replace the fuse only by a fuse of the same type and of the same amperage in order to avoid fire hazards.

★ Do not dismantle the UPS system.

2. Description of commonly used notations

Some or all of the following Notations may be used in this manual and may appear in your application process. Therefore, all users should be familiar with them and understand their explanations.

Notation and Explanation	
Notation	Explanation
⚠	Alert you to pay special attention
⚠	Caution of high voltage
|	Turn on the UPS
○	Turn off the UPS
⏻	Idle or shut down the UPS
~	Alternating current source (AC)
⎓	Direct current source (DC)
⏚	Protective ground
	Alarm silence
	Overload indication
	Battery check
♻	Recycle
	Keep UPS in a clear area

3. Introduction – Plus III-6KLRB/ Plus III-10KLRB

3.1 Product Specification and Performance

1) General Specification

INPUT		
Model No.	Plus III-6KLRB	PlusIII-10KLRB
Phase	Single	
Voltage	176~276VAC	
Frequency	(45~55)/(54~66) Hz	
Current(A)*	25.8	43.0
THDI	< 5% @ full load	
Power Factor	≥0.99 @ full load	

*Rated current while input rated voltage is 230VAC

OUTPUT		
Model No.	Plus III-6KLRB	PlusIII-10KLRB
Power rating	6kVA/5.4kW	10kVA/9kW
Voltage	208*/220/230/240×（1 ± 1%）VAC	
Frequency	50/60×（1±0.05）Hz (Battery mode)	
Wave form	Sinusoidal	
Load type	PF 0.5 1, lagging	
THDV	< 2% @ full linear load <5% @ full non linear load	
Overload	In Line mode**: 10 min 105~125% 1 min 125~150% 10 s >150% 100 ms >170% In Battery mode: 2 min 105~125% 30 s 125~150% 100 ms >150%	

*The load capacity would be derated to 90% automatically when the output voltage is

adjusted to 208VAC.

*The overload capacity would be derated automatically in Line mode while the circumstance temperature is larger than 35 degree.

2) Operating Environment

Operating Temperature	0 ºC to 45 ºC
Operating humidity	< 95%
Altitude	< 1000m*
Storage temperature	-15 ºC to 50 ºC

*The load capacity should be derated 1% every 100m heightened on the basis of 1000m.

3.2 Typical Backup Time (Typical values at 25°C in minutes)

Model No.	100 % Load
Plus III-6KLRB	5
PlusIII-10KLRB	4

3.3 Unpacking and Inspection

1) Unpack the packaging and check the package contents. The shipping package contains:

- A UPS
- A user manual
- A communication cable
- A battery cable (for Plus III-6KLRB/PlusIII-10KLRB only)

2) Inspect the appearance of the UPS to see if there is any damage during transportation. Do not turn on the unit and notify the carrier and dealer immediately if there is any damage or lacking of some parts.

3.4 Input and output power cords and protective earth ground installation

1. **Notes for installation**

1) The UPS must be installed in a location with good ventilation, far away from water, inflammable gas and corrosive agents.
2) Ensure the air vents on the front and rear of the UPS are not blocked. Allow at least 0.5m of space on each side.
3) Condensation to water drops may occur if the UPS is unpacked in a very low temperature environment. In this case it is necessary to wait until t he UPS is fully dried inside out before proceeding installation and use. Otherwise there are hazards of electric shock.

2. **Installation**

Installation and wiring must be performed in accordance with the local electric code and the following instructions by professional personnel.

For safety, please cut off the mains power switch before installation. The battery breaker also needs to be cut off if it is a long backup time model.

1) Open the terminal block cover located on the rear panel of the UPS, please refer to the appearance diagram.
2) For Plus III-6KLRB UPS, it is recommended to select the UL1015 10AWG(6mm^2) wire or other insulated wire which complies with AWG Standard for the UPS input and output wirings.
3) For PlusIII-10KLRB, it is recommended to select the UL1015 8AWG(10mm^2) wire or other insulated wire which complies with AWG Standard for the UPS input and output wirings

Note: Do not use the wall receptacle as the input power source for the UPS, as its rated current is less than the UPS's maximum input current. Otherwise the receptacle may be burned and destroyed.

4) Connect the input and output wires to the corresponding input and output terminals according to the following diagram.

I) Input/Output: 1P2W+G 220V or 230V or 240V

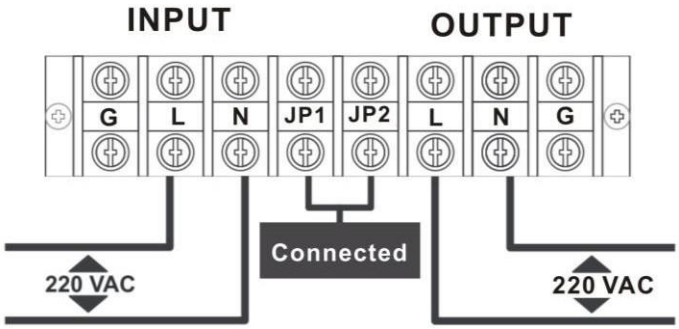

II) Input: 1P2W+G 220V or 230V or 240V, Output: 1P3W+G 110/220V or 115/230V or 120/240V, With Isolation Transformer

・Connection for dual Output: 110/220V or 115/230V or 120/240V

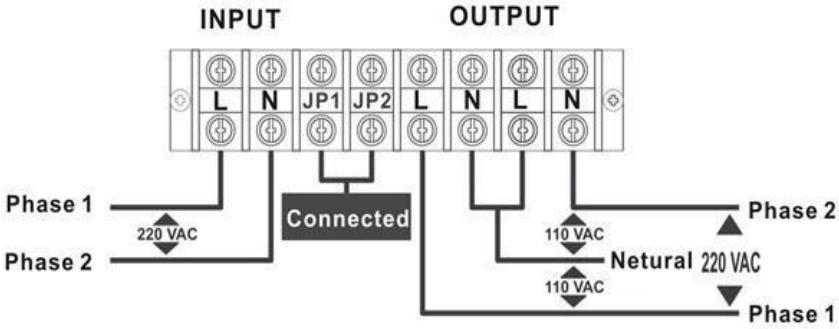

- Connection for single output 110V or 115V or 120V

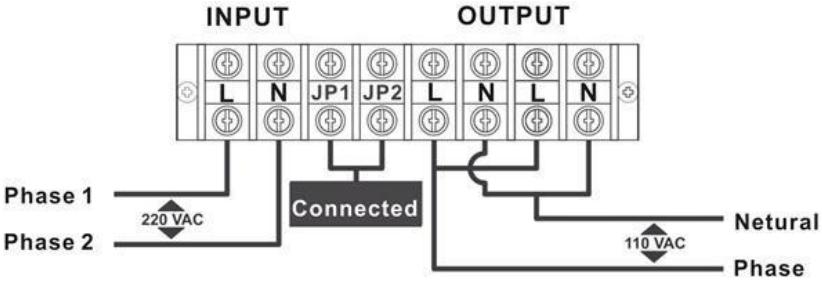

Note: you must make sure that the input and output wires and the input and output terminals are connected tightly.

5) The protective earth ground wire refers to the wire connection between the equipment which consumes electric equipment and the ground wire. The wire diameterof protective earth ground wire should be at least as above mentioned for each model and green wire or green wire with yellow ribbonwire is used.

6) After having completed the installation, make sure the wiring is correct.

7) Please install the leak current protective breaker at the output power distributionpanelof the UPS if necessary.

8) To connect the load with the UPS, please turn off all the loads first, then perform the connection and finally turn on the loads one by one.

9) No matter the UPS is connected to the utility power or not, the output of the UPS may have electricity. The parts inside the unit may still havehazardous voltage after turning off the UPS. To make the UPS have nooutput, power off the UPS, and then disconnect the utility power supply.

10)Suggest charging the batteries for 8 hours before use. After connection, turn the inputbreaker in the "ON" position, the UPS will charge the batteries automatically. You can also use the UPS immediately without charging the batteries first, but the backup time may be less than the standard value.

11)If it is necessary to connect the inductance load such as a monitor or a laser printer to the UPS, the start-up power should be used for calculating the capacity of the UPS, as its start-up power consumption is too big when it is started.

- **Important notes: If the UPS is used in single mode, JPI and JP2 must be connected by 10AWG(6mm2). If the UPS is used in parallel mode, the Jumper between JP1 and JP2 mustbe removed**.

3.5 Operating procedure for connecting the long backup time model UPS with the external battery

1. The nominal DC voltage of external battery pack is 240VDC. Each battery pack consists of 20 pieces of 12V maintenance free batteries in series. To achieve longer backup time, it is possible to connect multi-battery packs, but theprinciple of "same voltage, same type"

should be strictly followed.

2. The connector of the external battery cable is used to plug into the externalbattery socket of the UPS, the other end of the external battery cable is madeof three open wires with ring terminals to connect with the external battery pack(s). The procedure of installing battery bank should be complied with strictly.Otherwise you may encounter the hazardous of electric shock.
   1) A DC breaker must be connected between the battery pack and the UPS. The capacity of breaker must be not less than the data specified in the general specification.
   2) Set the battery pack breaker in “OFF” position and connect the 20 pieces of batteries in series.
   3) You must connect the external battery cable to the battery first, if you connect the cable to the UPS first, you may encounter the hazardous of electric shock. The positive pole of the battery is connected to the 10KE in parallel with blue and brown wires; the negative pole of the battery is connected to the 10KE in parallel with black and white wires; the green and yellow ribbon wire is connected to the ground of the battery cabinet.

3. To complete the connection by plugging the connector of the external battery cable into the external battery socket of the UPS. Do not attempt to connect any loads to the UPS now. You should connect the input power wire to the right position first. And then set the breaker of the battery pack in the ON position. After that set the input breaker in the ON position.

   The UPS begins to charge the battery packs at the time.

3.6 EPO Connection

1. Introduction

Emergency power off function which the UPS supplies is, when the emergency occurs, such as the failure of load, the UPS can cut off the output at once by operating the EPO port manually.

2. The connection

Normally the EPO connector is closed with a wire on the rear panel, which is supplied in the accessory. Once the connector is open, the UPS would stop the output and enter EPO status.

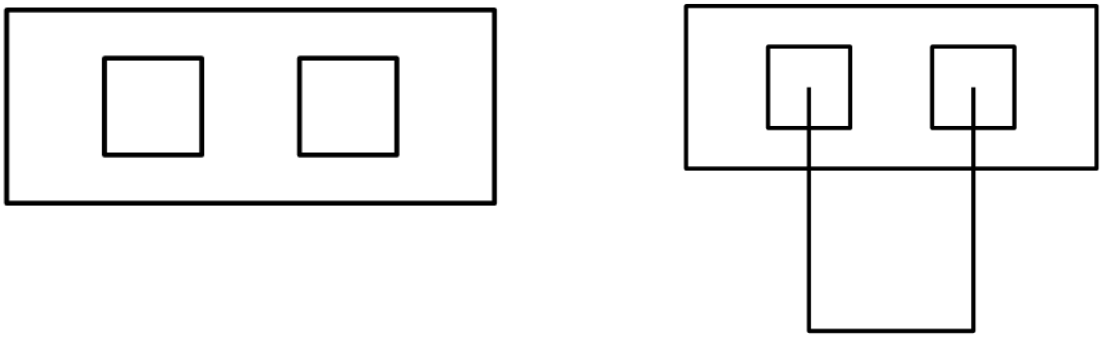

To recover to normal status, first EPO connector should be closed, and enter LCD menu (illustrated in the chapter of 5.4.5) to clear EPO status, then UPS would stop alarm and recover to Bypass model. And UPS needs be turned on by manual operation.

The polarity of connector could be inversed by setting in LCD menu in the chapter of 5.4.7. Contact your local distributor for further information before modifying the settings.

4. **Rear View**

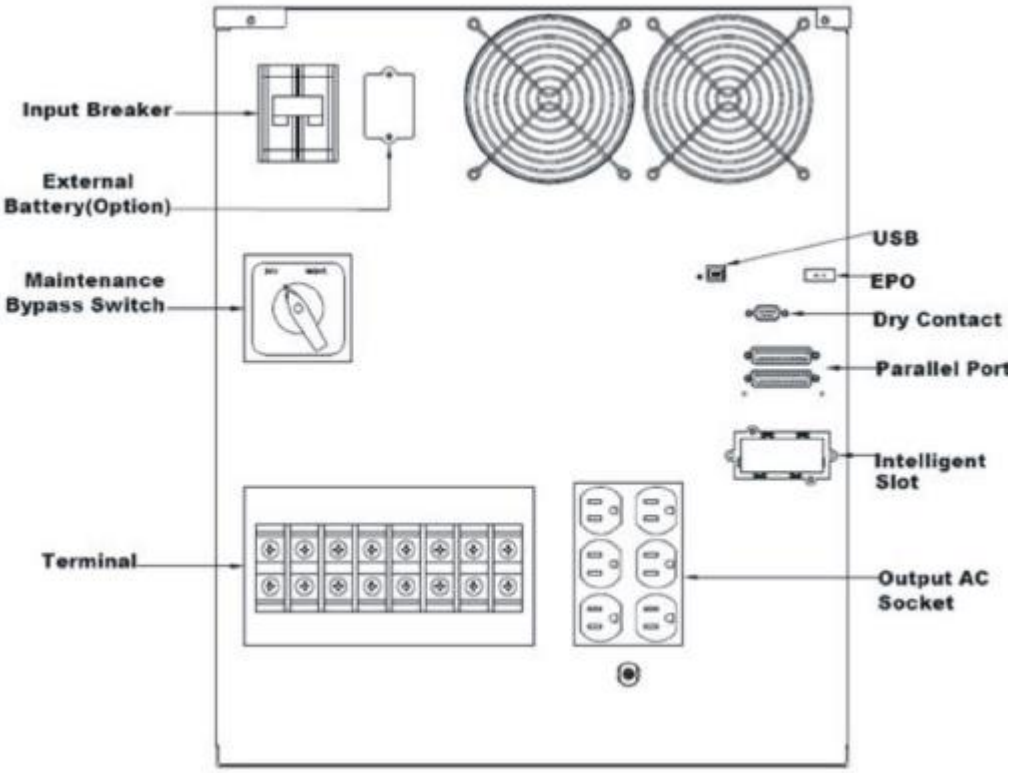

5. Operation

5.1 Display Panel

The UPS has a four-button dot matrix LCD with dual color backlight. Standard back-light is used to light up the display with white text and a blue background. When the UPS has a critical alarm, the backlight changes the text to dark amber and the background to amber.
Besides the LCD, the UPS has four colorized LEDs to provide more convenient information.

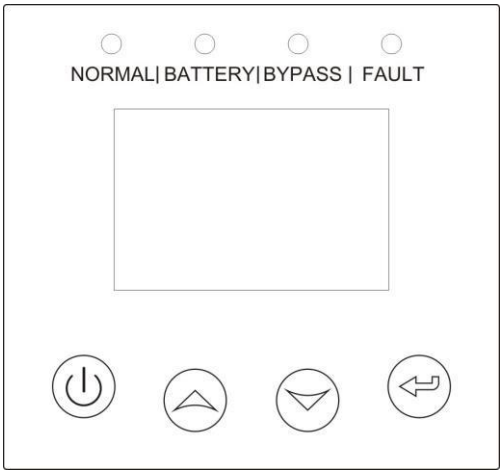

Fig. 5-1 Control Panel

Table 5-1 Control Button Functions

The Button	**Function**	**Illustration**
	Power on	When the unit is no power and has connected with battery, press this button for >100ms&<1s to power on
	Turn on	When the unit is powered on and is in Bypass mode, press this button for >1s to turn on
	Turn off	When the unit has been turned on, press this button for >3s to turn off

	Enter main menu	When displaying default UPS status summary screen, press this button for >1s to enter the main menu tree
	Exit main menu	Press this button for >1s to exit the present menu to default system status display menu without executing a command or changing a setting
	Scroll up	Press this button for >100ms&<1s to scroll up the menu option
	Scroll down	Press this button for >100ms&<1s to scroll down the menu option
	Enter next menu tree	Press this button for >100ms&<1s to select the present menu option, or enter next menu, but do not change any setting
	Select one menu option	Press this button for >100ms&<1s to select the present menu option, or enter next menu, but do not change any setting
	Confirm the present setting	Press this button for >1s to confirm the edited options and change the setting

Table 5-2 LED definition

UPS state	**Normal LED (Green)**	**Battery LED (Yellow)**	**Bypass LED (Yellow)**	**Fault LED (Red)**
Bypass mode with no output			★	↑
Bypass mode with output			●	↑
Turning on	△	△	△	△
Line mode	●			↑
Battery mode	●	●		↑
HE mode	●		●	↑
Battery test mode	△	△	△	△
Fault mode			↑	●
Warning mode	↑	↑	↑	★

Note :

●: Lightened constantly

△ : #1-#4 Lightened circularly

★: Flashing

↑: Depended on the fault/warning status or other status

Table 5-3 Alarm definition

UPS condition	**Buzzer status**
Fault active	Continuous
Warning active	Beep every second
Ba tery output	Beep every 4 seconds, if battery low, buzzer Beep every second
Bypass output	Beep every 2 minutes
Overload	Beep twice every second

The UPS provides useful information about UPS itself, load status, events, measurements, identification, and settings through the front panel display. During powering on, the LCD would display the Welcome logo for several seconds and then enter to the default page which shows the UPS status summary.

The display automatically returns to the default UPS status summary screen when no button has been pressed for 15 minutes.
On the UPS status summary screen it provides the following information:

- Status summary, including mode and load
- Alarm status, if any are present
  Notes: alarm including fault and warning information
- Battery and charger status, including battery voltage, charge level and charger status
- Running information including parallel UPS and running time

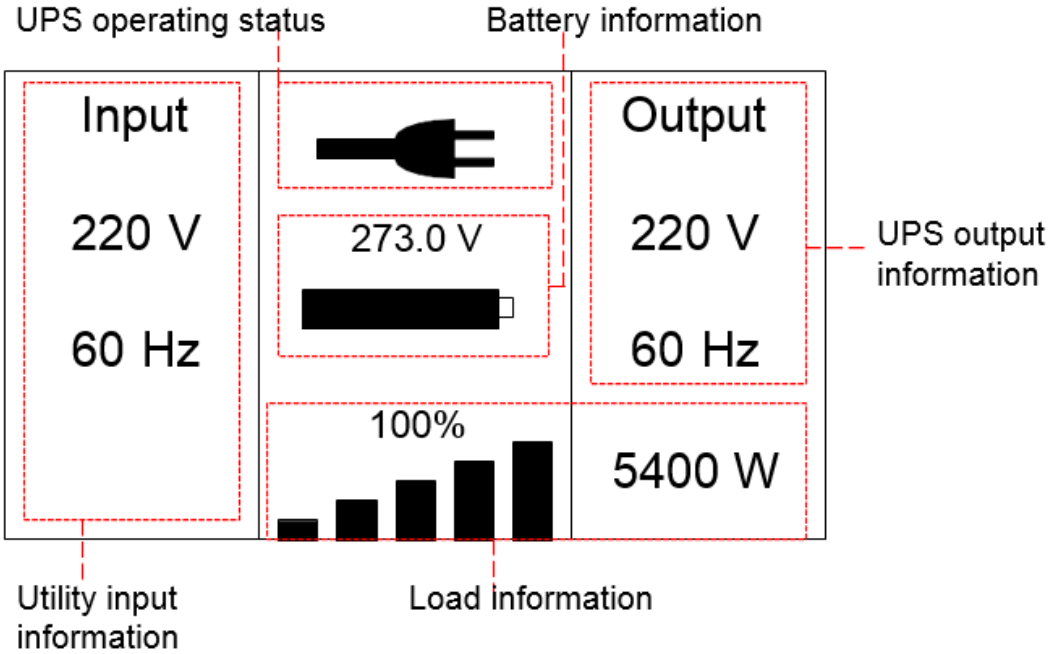

Fig. 5-2 The default LCD display

The more detailed operation of LCD is illustrated in the chapter of 5.4.

5.2 Operating Mode

The different graphic symbol could be displayed corresponding to current operating mode or status.

5.2.1 Line mode

The example of LCD display in Line mode is shown in the following diagram.

The symbol of operating in Line mode

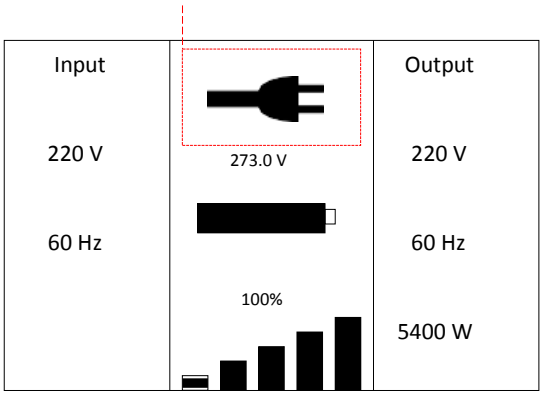

Fig. 5-3 Line mode

5.2.2 Battery mode

The example of LCD display in battery mode is shown in the following diagram.

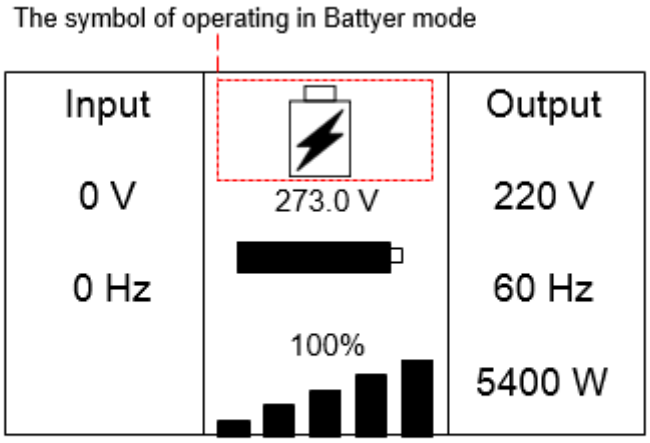

Fig. 5-4 Battery mode

When the UPS is running in battery mode, the buzzer beeps once every 4 seconds.

5.2.3 Bypass with output

The LCD display in bypass mode with output is shown in the following diagram. The UPS does not have the backup function when it is in bypass mode. The power used by the load is supplied from the mains power via internal filter. The UPS will beep once every 2 minutes in bypass mode.

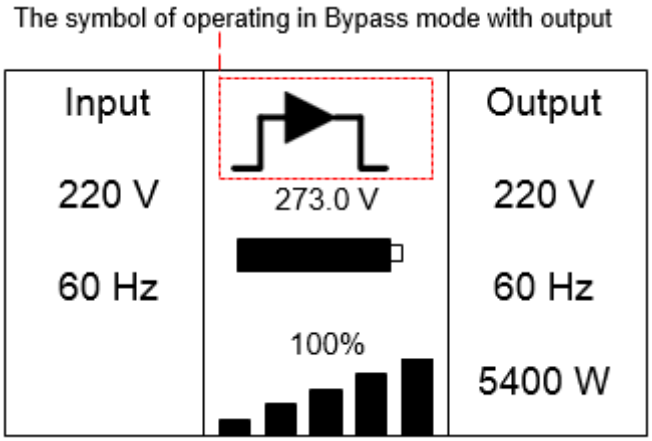

Fig. 5-5 Bypass mode with output

5.2.4 Bypass without output

The LCD display in bypass mode without output is shown in the following diagram.

The symbol of operating in Bypass mode without output

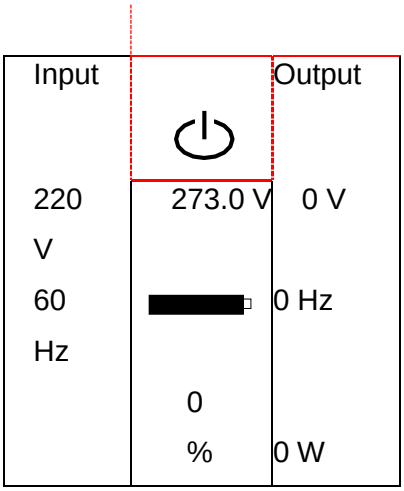

Fig. 5-6 Bypass mode without output

5.2.5 HE mode (High Efficiency mode)

It is also called economy mode.

After the UPS is turned on, the power used by the load is supplied from the mains power via internal filter while the mains power is in normal range, so the high efficiency could be gained in the HE mode. Once the mains power is loss or abnormal, the UPS would transfer to Line mode or Battery mode and the load is supplied continuously.

The symbol of operating in ECO mode

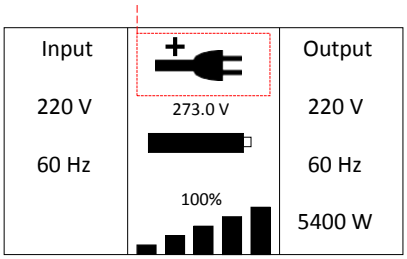

Fig. 5-7 HE mode

1) The function could be enabled through the LCD setting or the software (Winpower, etc.).
2) It is attention that the transfer time of UPS output from HEmode to battery mode is about 10ms. But it is still too long for some sensitive load.

5.2.6 Converter mode

In converter mode, the UPS would free run with fixed output frequency(50Hz or 60Hz). Once the mainspoweris loss or abnormal, the UPS would transfer to battery mode and the load is supplied continuously.

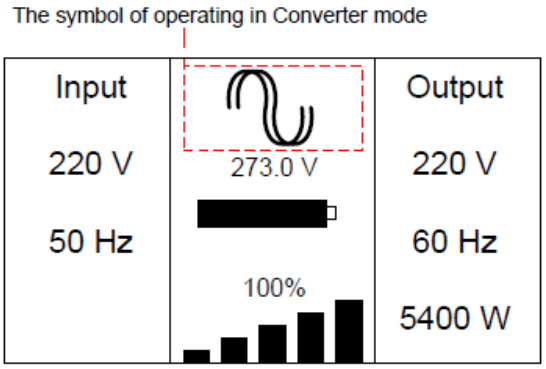

Fig. 5-8 Converter mode

1) The function could be enabled through the LCD setting or the software (Winpower, etc.).
2) The load should be derated to 60% in converter mode.

5.2.7 Warning

When the warning occurs, it illustrates that there are some abnormal problems during the operation of UPS. Normally the problems are not fataland the UPS continues working, but they should be paid attention to, or the UPS may fail.

The detailed warning table isshown in chapter of 7.

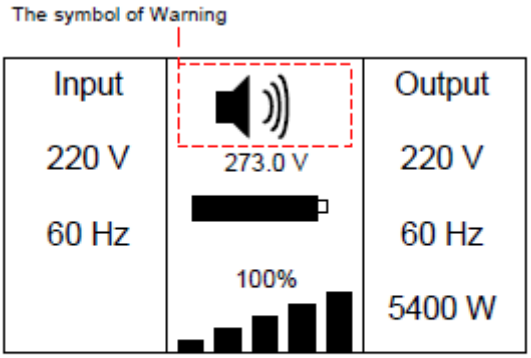

Fig. 5-9 Warning

5.2.8 Fault

When the fault occurs, it illustrates that some fatal problems happened, the UPS would directly cut off the output or transfer tobypass, and keep alarming. The backlight of LCD would also turn to red.

The detailed fault table is shown in chapter of 7.

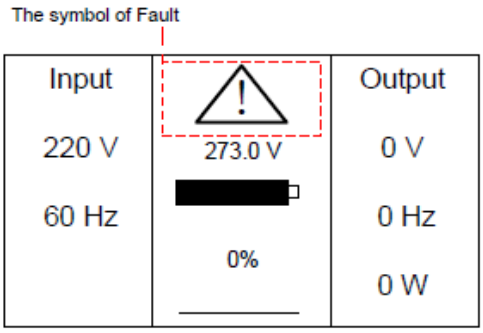

Fig. 5-10 Fault

5.2.9 Other status

When the UPS is overload, the alarm will beep twice every second.Some unnecessary loads should be get rid of one by one to decrease the loadsconnected to the UPS less than 90% of its nominal power capacity.

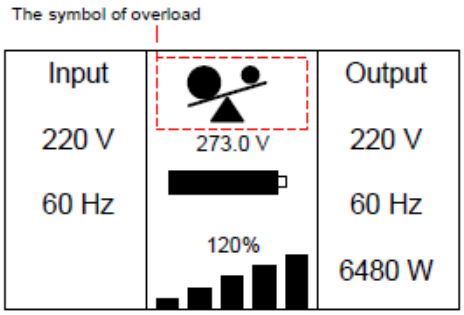

Fig. 5-11 Overload

While doing the battery test, LEDs would be lighted circularly, and the symbol of battery test would be shown on the display.

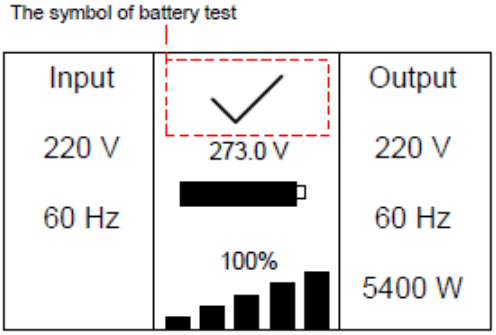

Fig. 5-12 Battery test

And if the battery status detected is “battery disconnected”, the symbol of battery failure would be shown and UPS would alarm.

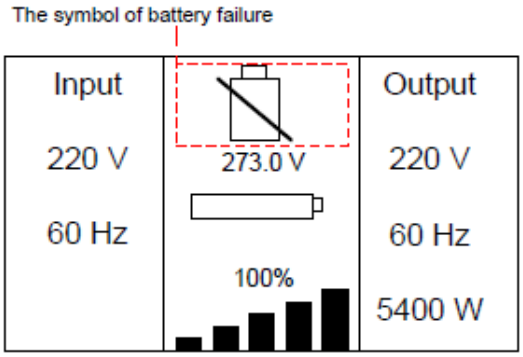

Fig. 5-13 Battery fails

5.3 Turning On and Turning Off UPS

Attention: The UPS could only be turning on while connecting with the mainsat the first time.

Attention: Please switch off the connected loads first before turning on the UPS, and switch on the loads one by one after the UPS is turned on. Switch off all of the connected loads before turning off the UPS.

5.3.1 Turning on UPS with mains

1) Check all the connection is correct. Check the breaker of external battery pack is in “ON” position.
2) Set input breaker in“ON” position. At this time the fan begins to rotate, LCD will show “WELCOME”. Then LCD will show the default UPS status summary screen after UPS finishing self-test.
3) By pressing button continuously for more than 1 second, the buzzer will beep for 1s, UPS starts to turn on.
4) A few seconds later, the UPS turns into Line mode. If the mainspower is abnormal, the UPS will transfer to Battery mode without output interruption of the UPS.

5.3.2 Turning on UPS without mains

1) Check allthe connection is correct. Check the breaker of external battery pack is in “ON” position.
2) By pressing button continuously for more than 100ms, the UPS would be powered on. At this time the fan begins to rotate, LCD will show“WELCOME”. Then LCD will show the default UPS status summary screen after UPSfinishing self-test.
3) By pressing button continuously for more than1s, the buzzer will beep for 1s, UPS starts to turn on.
4) A few seconds later, the UPS turns into Battery mode. If the mainspower comes back, the UPS will transfer to Line mode without output interruption of the UPS.

5.3.3 Turning off UPS with mains

1) To turn off the inverter of UPS by pressing button continuously for more than 3sand the buzzer will beep for 3s. The UPS willturn into Bypass mode at once.

2) When completing the above action, UPS output voltage is still present.In order to cut off the UPS output, simply cut off the mainspower supply. A few seconds later, LCD display shuts down and no output voltage is available from the UPS output terminal.

5.3.4 Turning off UPS without mains

1) To power off the UPS by pressing button continuously for more than 3s, and the buzzer will beep 3s. The UPS will cut off the output at once.

2) A few seconds later, LCD shuts down and no voltage is available fromthe UPS output.

5.4 LCD Operation

Except the default UPS status summary screen,the user could get moreuseful information about UPS current status, detailed various measurements, old eventswhich ever occurred, UPS own identification, and could change the settings to fit the user own requirements, optimize the function of UPS.

5.4.1 The main menu

In the default UPS status summary screen, when pressing or <1s, the detailed information about alarm, the parallel system, battery would be shown.
In the default UPS status summary screen, when pressing >1s, the display would enter main menu tree.

The main menu tree includes six branches: UPS status menu, event log menu, measurement menu, control menu, identification menu, setting menu.

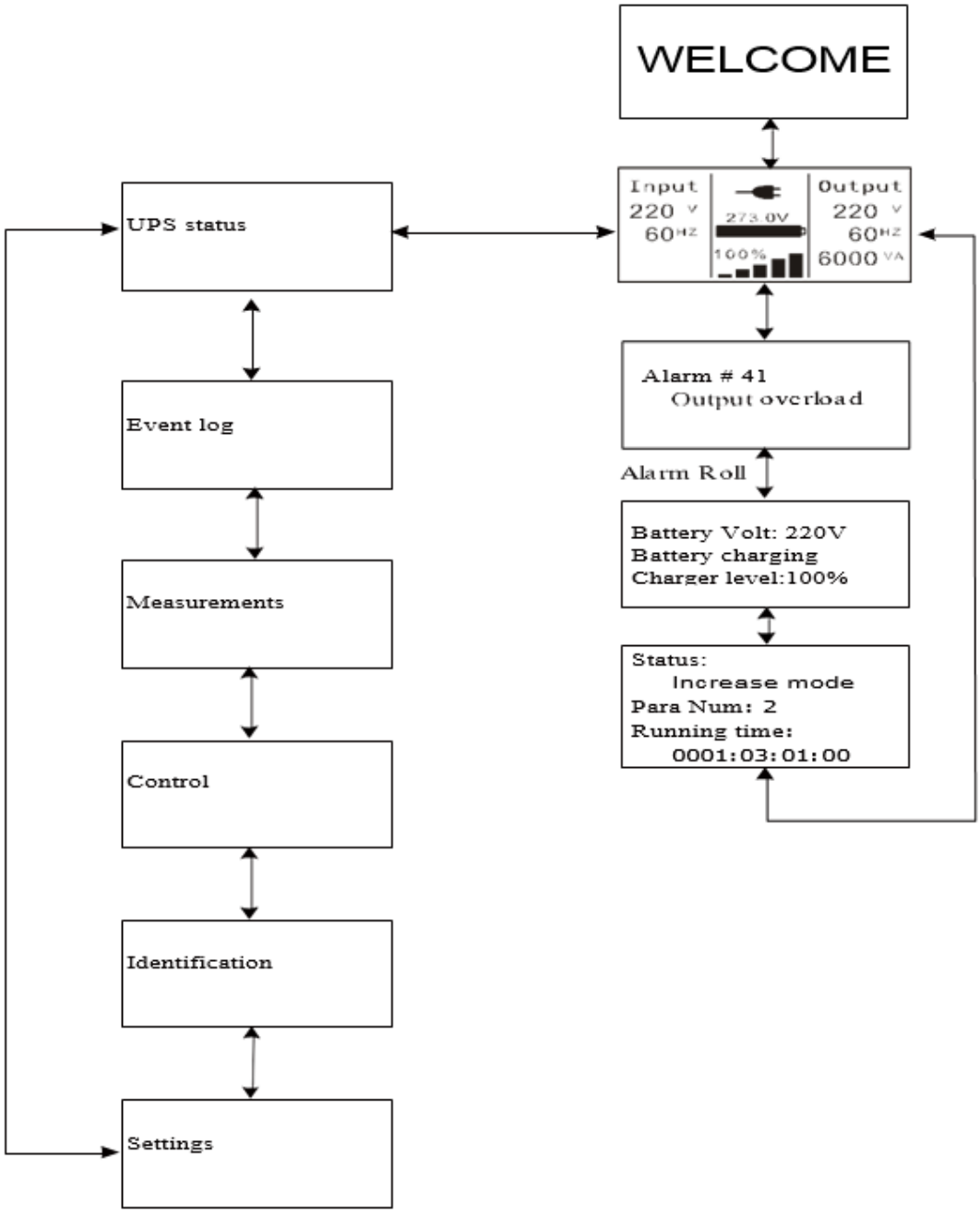

ig. 5-14 Main menu tree

5.4.2 The UPS status menu

By pressing ⏎ on the menu of “UPS status”, the display would enter the next UPS status menu tree.

The content of UPS status menu tree is same as the default UPS status summary menu.

By pressing ⌃ >1s, the display would return the last main menu tree.

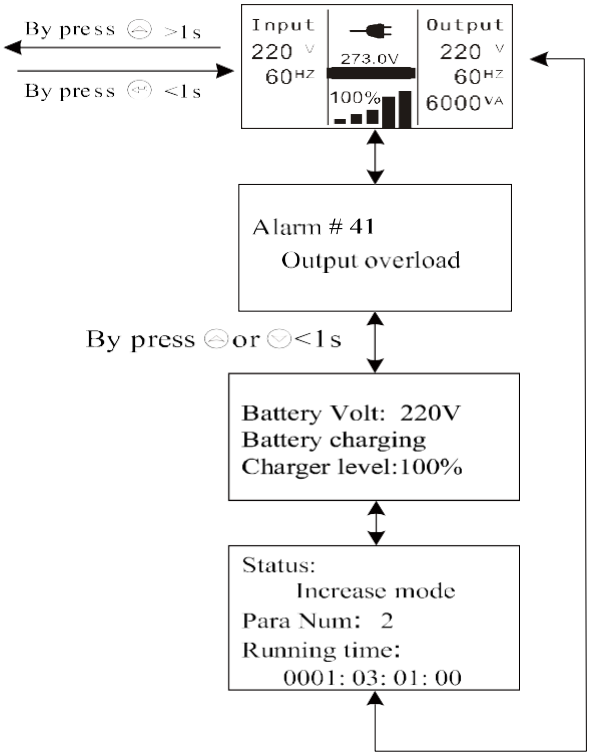

Fig. 5-15 UPS status menu tree

5.4.3 The event log menu

By pressing on the menu of “Event log”, the display would enter the next event menu tree.

All the old event, alarm and fault have been recorded here. The information includes the illustration, the event code, and the operating time of UPS when the event happened. By press or <1s, all the event could be displayed one by one.

The max number of record is 50, when the number is larger than 50, the oldest one would be changed to the newest information.

By pressing >1s, the display would return the last main menu tree.

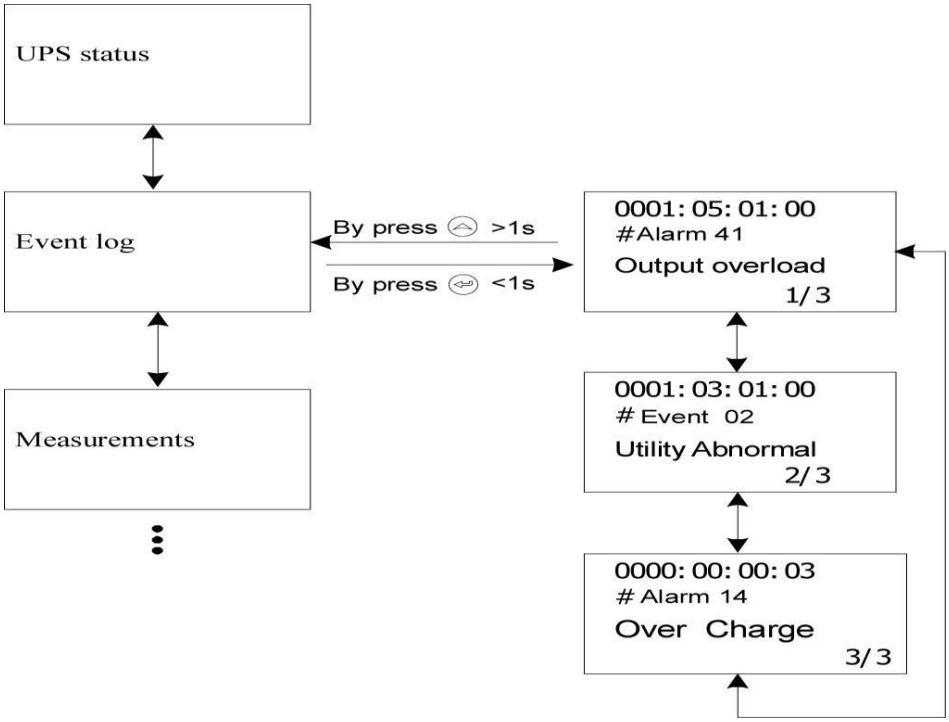

Fig. 5-16 Event menu tree

5.4.4 The measurement menu

By pressing ⏎ on the menu of “Measurement”, the display would enterthe next measurement menu tree.

A lot of detailed useful information could be checked here, Ex. the output voltage and frequency, the output current, the load capacity, the input voltage and frequency, etc.

By pressing ⌃ >1s, the display would return the last main menu tree.

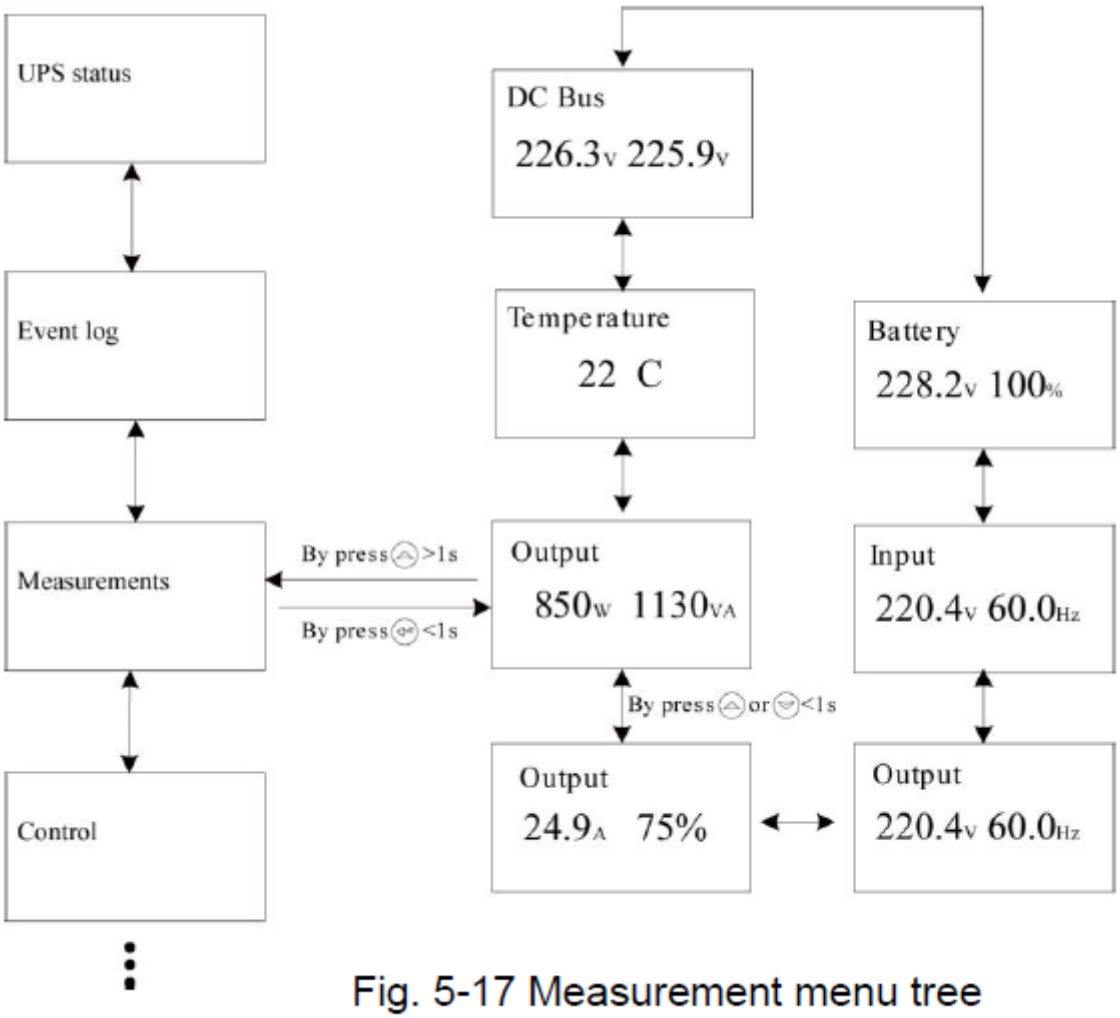

Fig. 5-17 Measurement menu tree

5.4.5 The control menu

By pressing ⏎ on the menu of “Control”, the display would enter the next control menu tree.

1) Single UPS turn off: is one command to turn off one UPS which is operated currently in a parallel system, and other UPSs continue working to supply the load in the parallel system.
2) Single UPS battery test: is one command to control one UPS which is operated currently in a parallel system to do the battery test singly, and other UPSs do not do the battery test.
3) Parallel UPS battery test: is one command to control all UPS in a parallel system to do the battery test at the same time.
4) Clear EPO status: once EPO status is enabled, the UPS output would be cut off. To recover to normal status, first EPO connector should be closed, and enter this menu to clear EPO status, then UPS would stop alarm and recover to Bypass model.And UPS needs be turned on by manual operation.
5) Reset fault status: when fault occurs, UPS would keep in Fault mode and alarm. To recover to normal status, enter this menu to reset error status, then UPS would stop alarm and recover to Bypass mode.And the reason of fault should be checked and deleted before UPS is turned on again by manual operation.
6) Restore factory settings: all the settings would be recover to default factory settings. It could only be done in Bypass mode

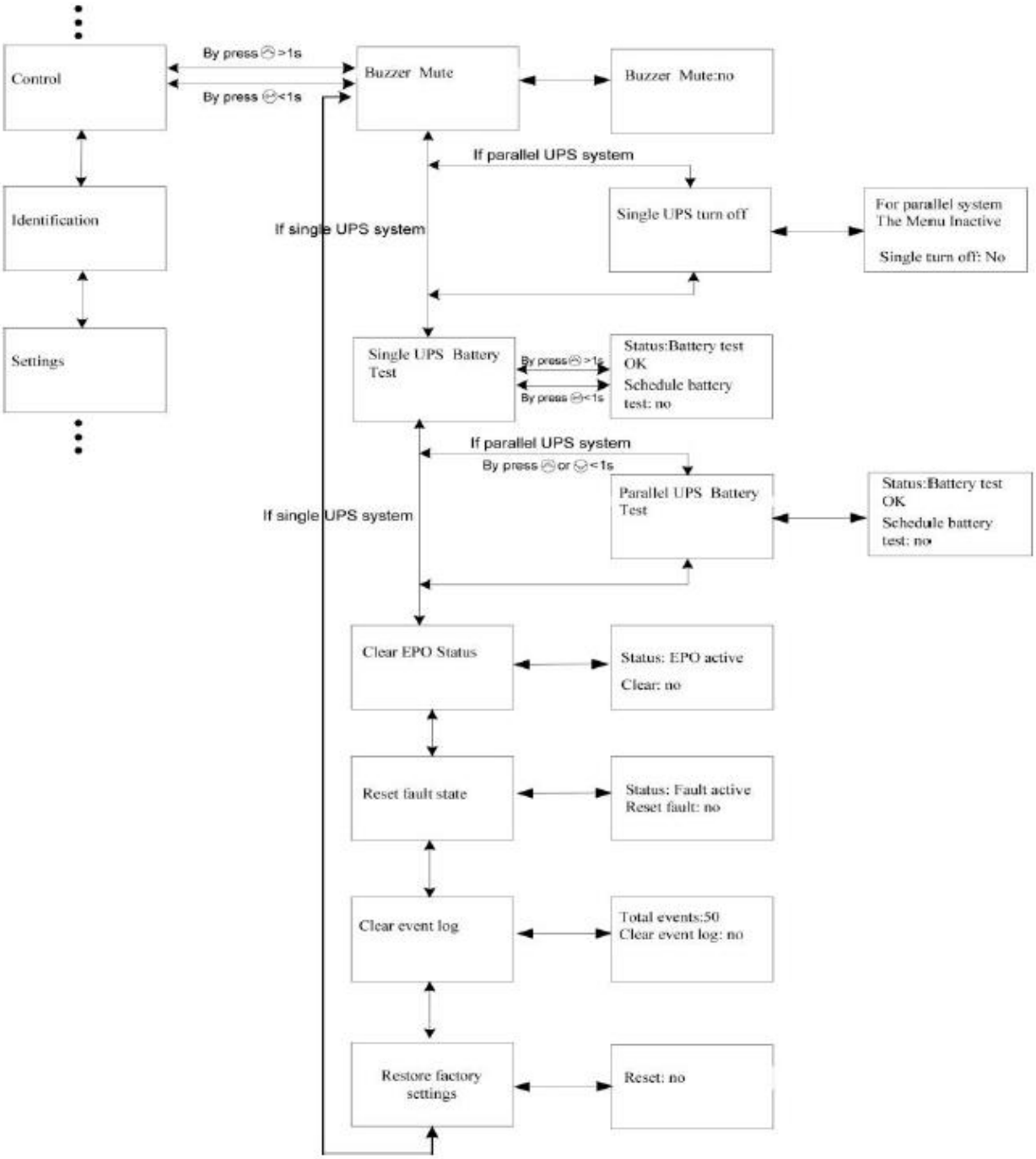

Fig. 5-18 Control menu tree

Example: clear EPO status

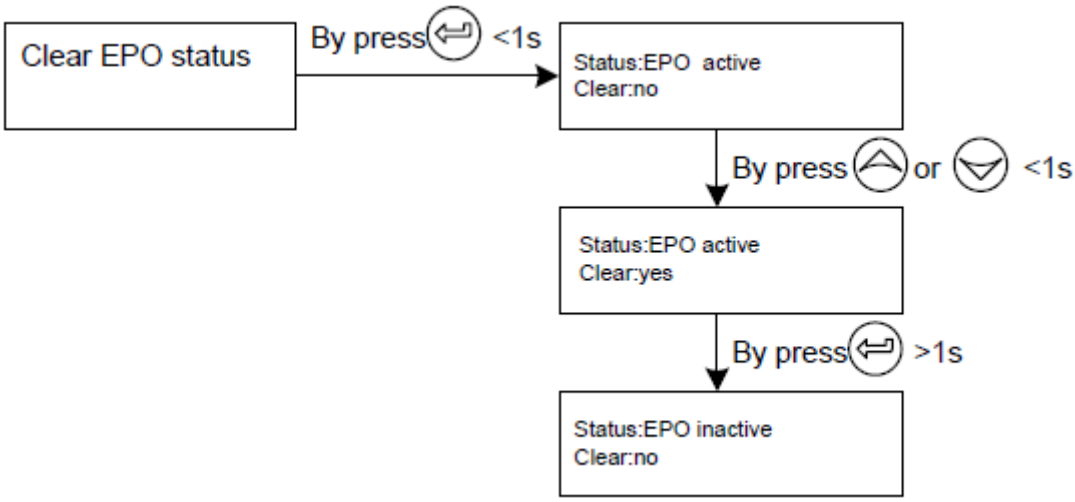

Note: First make sure the EPO signal is inactive or the LCD will show below information and the EPO active status couldn't be cleared.

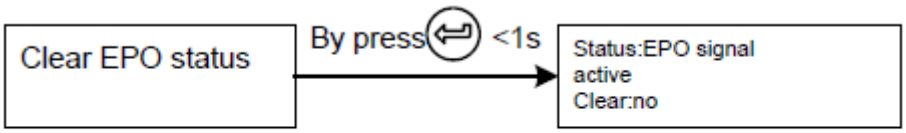

Fig. 5-19 clear EPO status

5.4.6 The identification menu

By press on the menu of "Identification", the display would enter the next identification menu tree.

The identification information includes UPS serial number, firmware serial number, model type, would be shown here.

By press >1s, the display would return the last main menu tree.

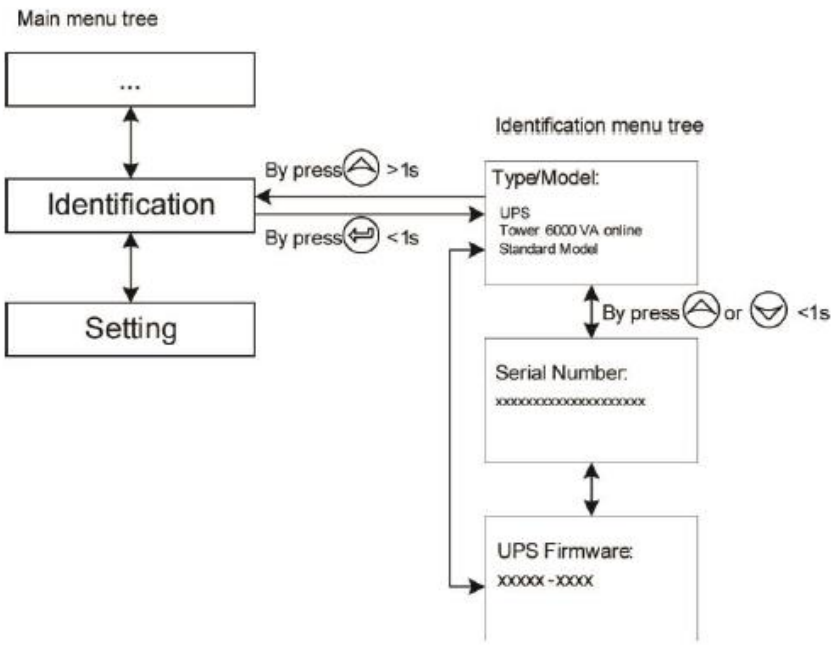

Fig. 5-20 Identification menu tree

5.4.7 The setting menu

Please contact your local distributor for further informationbefore using the settings.Some settings would change the specification, and some settings would enable or disable some functions. The unsuitable option set by user may result in potential failures or protecting function loss, even directly damage the load, battery or UPS.

The most of settings could only be done while UPS is in Bypass mode.

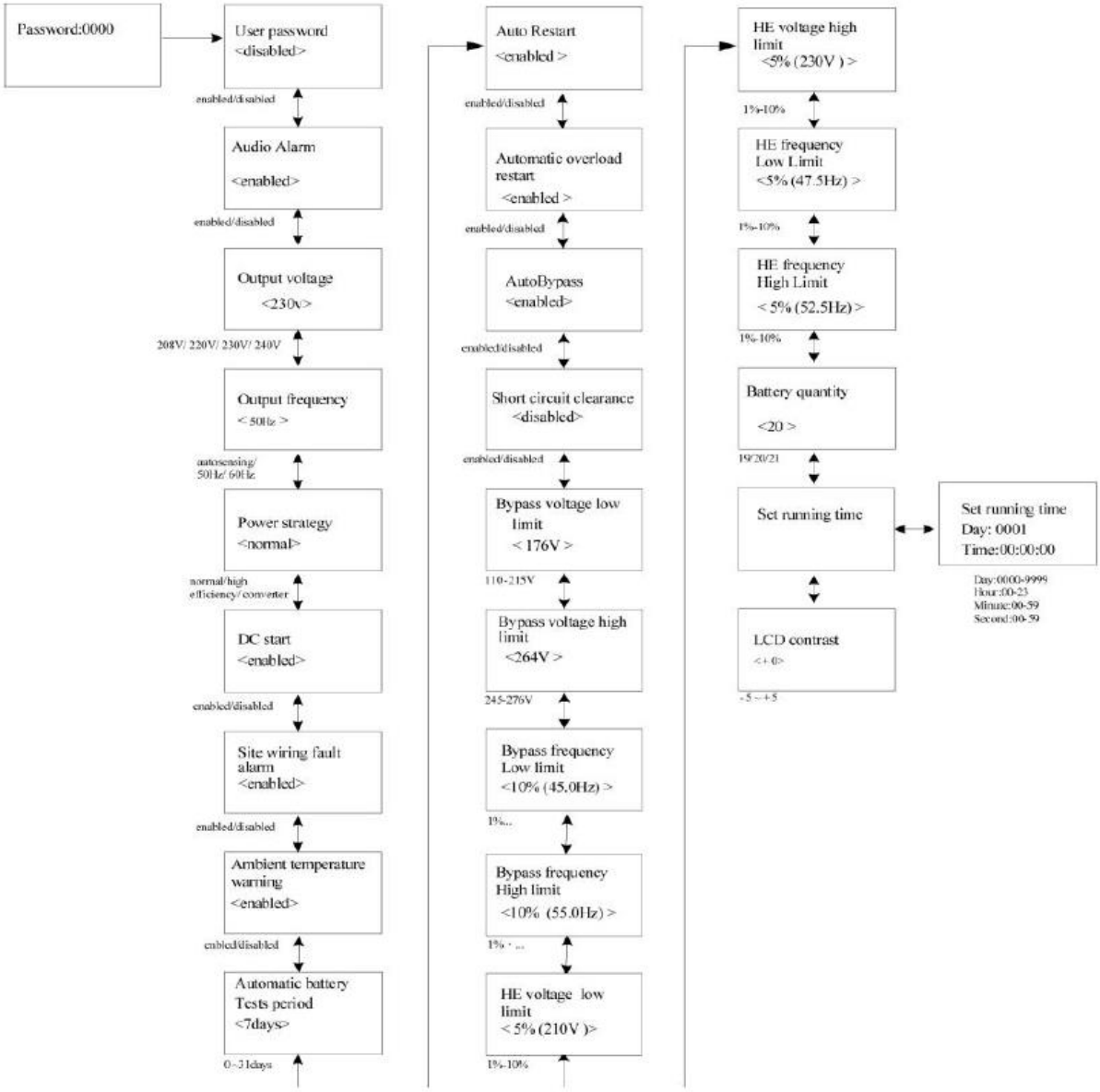

Fig. 5-21 Setting menu tree

By press ⏎ on the menu of “Identification”, the display would enter the next setting menu tree if “User password”is disabled. If “User password”is enabled,the user should enter the password by press ⌃ , ⌄, and ⏎, then enter the next setting menu tree.

Table 5-4

Submenu item	Optional Values	Default value
User password	enabled/disabled	disabled
Audio alarm	enabled/disabled	enabled
Rated output voltage	208/220/230/240V	230V
Output frequency	autosensing/50/60Hz	autosensing
Power strategy**	normal/high efficiency/ converter	normal
DC start	enabled/disabled	enabled
Site wiring fault alarm	enabled/disabled	enabled
Ambient temperature warning	enabled/disabled	enabled
Automatic battery tests period	0-31days	7days
Auto Restart	enabled/disabled	enabled
Automatic overload restart	enabled/disabled	enabled
AutoBypass	enabled/disabled	enabled
Short circuit clearance	enabled/disabled	disabled
Bypass voltage low limit	110~215V	176V
Bypass voltage high limit	245~276V	264V
Bypass frequency low limit	1%~10%	10%
Bypass frequency high limit	1%~10%	10%
HE voltage low limit	1%~10%	5%
HE voltage high limit	1%~10%	5%
HE frequency low limit	1%~10%	5%
HE frequency high limit	1%~10%	5%
Battery quantity***	19/20/21	20
Set running time	Day:hour:minute:second 0000:0000:00~9999:23:59:59	Running time
LCD contrast	-5~+5	0

*Password is AAAA when enabled.

**Read the chapter of 6.1 and 6.2, before using high efficiency or converter function.

***Ensure the real battery quantity is same as the setting, or the batteries would be damagedpermanently.

Example: set rated output voltage value

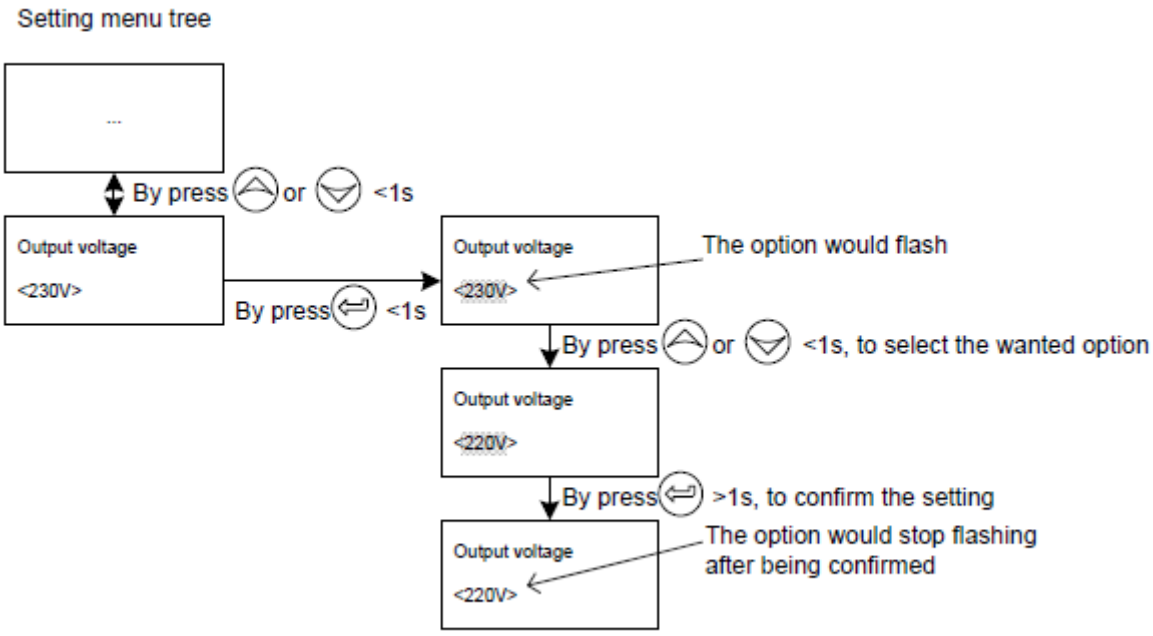

Fig. 5-22 Set rated output voltage value

6. Special Function

The series UPS has some special functions, which could satisfy some special application of user. And the functions have own features, please contact your local distributor for further information before using thefunction.

6.1 HEFunction

6.1.1 Brief introduction of HEfunction

If HE function is set to enable, after the UPS is turned on, the power used by the load is directly supplied from the mainspower via internal filter while the utility power is in normal range, so the high efficiency could be gained in HEmode. It is also called economy mode. Once the mainspoweris loss or abnormal, the UPS would transfer to Line mode or Battery mode and the load is supplied continuously.

The great virtue is overall high efficiency ≥0.96 of UPS, to save powerfor user.

But the disadvantage is 1) the load can not be protected as well as in Line mode, for the load is directly supplied from the mains; 2) the transfer time of UPS output from HE mode to Battery mode is about 10ms.

So the function is not suitable to some sensitive loads, and the region where the mains power is unstable.

6.1.2.1 Set the function

The function could be enabled through the LCD settingin Bypass mode.

Enter the power strategy setting menu by following chapter of 5.4.7.

6.2 ConverterFunction

6.2.1 Brief introduction of Converter function

In converter mode, the UPS would free run with fixed output frequency (50Hz or 60Hz). Once the mainspoweris loss or abnormal, the UPS would transfer to Battery mode and the load is supplied continuously.

The great virtue is the output frequency is fixed, which is required by some very sensitive loads. But the disadvantage is the load capacity of UPS should be derated to 60% in converter mode.

6.2.2 Set the function

The function could be enabled through the LCD settingin Bypass mode.

Enter the power strategy setting menu by following chapter of 5.4.7.

6.3Parallel Function

6.3.1 Brief introduction of the redundancy

N+X is currently the most reliable power supply structure. N represents the minimum UPS number that the total load needs,X represents the redundant UPS number, i.e. the fault UPS number that the system can handle simultaneously. When the X islarger,the reliability of the power systemis higher. For occasions where reliability is highly depended on, N+X is the optimal mode.

As long as the UPS is equipped with parallel cables, up to 4 UPSs can be connected in parallel to realize output power sharing and power redundancy.

6.3.2 Parallel installationand operation

How to install a new parallel UPS system:

1) Before installing a new parallel UPS system, user need to prepare the input and output wires, the output breaker, and the parallel cable.
2) Users need to usea standard 25-pin communication cable, which should have 25 cores, corresponding stitches and shield, as the UPSparallel cable. The length of the parallel cable is appropriate to be less than 3m.
3) Remove the cover plate of the parallel port on the UPS, connect each UPS one by one with the parallel cable, and re-screw theParallel port coverwhich is supplied in the accessories.
4) Strictly follow the chapter of 4, the wiring requirement of single UPS to perform the

wiring of each UPS.

5) Connect the output wires of each UPS to an output breaker panel.
6) Disconnect the Jumper on JP1 and JP2 of the terminal block first, and connect each output breaker to a main output breaker and then to the loads.
7) Each UPS need an independent battery pack.
8) Please refer to the wiring diagram in the following diagram.
9) The distance between the UPSs in parallel and the breaker panel is required to beless than 20 meters.The difference between the wires of input and output of the UPSs is required to be less than 20%.

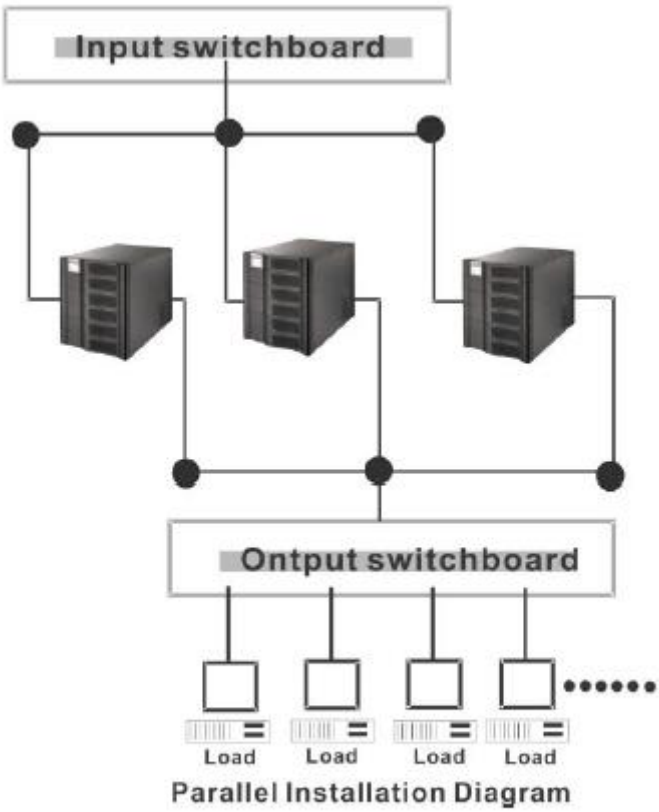

Parallel System Installation Diagram

10) Do not switch on the output breakerof each UPS, switchon the input breaker ofthe each UPS, the UPS should work in bypass with output, observe their displayto check if there are any warning or fault information,measure the outputvoltage of each UPS separately tocheck if the voltage difference between them is less than 1V. If the difference is more than 1V, check the wiring.
11) Press the ⏻ button of one UPS, each UPS would start to turn on, all the UPSs would transfer tothe INV mode together. Measure the outputvoltage of each UPS separately

tocheck if the voltage difference between them is less than 0.5V.If the difference is more than 0.5V, the UPSsneed to be regulated.

12) Press the⏻ button of one UPS, each UPS would start to turn off andtransfer to the Bypass mode, switch on the output breaker of each UPS to parallel all theoutput of UPSs together
13) Press the⏻ button of one UPS, each UPS would start to turn on, after turningon,the UPSs should work parallel in the Line mode.

How to join a new UPS to a parallel system:

1) First the parallel system must be installed one main maintenance mechanical switch or static switch.
2) Regulate the output voltage of the new UPS separately: check if the output voltage difference between the new UPS and the parallel system is less than 0.5V.
3) Ensure the bypass of the parallel system is normal and the bypass setting is “enable”, remove the cover plate of maintenance switch on the rear panel of each UPS, the UPS system would transfer to bypass automatically, set the own maintenance switch of each UPS from “UPS” to “BPS”.
4) Set the main maintenance switch or static switch from “UPS” to “BPS”, switch off the main output breaker and the main input breaker, the UPSs would shut down.
5) Ensure the UPSs shut down totally, add the new UPS and reinstall the new UPS parallel system by following step 1) to 9) of last chapter - “install a new parallel UPS system”.
6) Switch on the main input breaker and the main output breaker, and set the main maintenance switch or static switch from “BPS” to “UPS”, then set the UPS own maintenance switch from “BPS” to “UPS” and screw the maintenance cover plate back again. Press the ⏻ button of one UPS, each UPS would start to turn on, after turning on, the UPSs should work parallel in the Line mode.

How to remove a single UPS from a parallel system:

1) First the parallel system must be installed one main maintenance mechanical switch or static switch.

2) Ensure the bypass is normal and the bypass setting is “enable”, remove the cover plate of maintenance switch on the rear panel of each UPS, the UPS system would transfer to bypass automatically, set the own maintenance switch of each UPS from “UPS” to “BPS”.

3) Set the main maintenance switch or static switch from “UPS” to “BPS”, switch off the main output breaker and the main input breaker, and the UPSs would shut down.

4) Ensure the UPSs shut down totally, remove the wanted UPS and reinstall the new UPS parallel system by following step 1) to 9) of last chapter - “install a new parallel UPS system”.

5) If the removed UPS or the remained UPS will be used in a stand-alone mode, then JP1 and JP2 on the terminal block should be connected with a short connection wire.

6) Switch on the main input breaker and the main output breaker, and set the main maintenance switch or static switch from “BPS” to “UPS”, then set the UPS own maintenance switch from “BPS” to “UPS” and screw the maintenance cover plate back again. Press the button of one UPS, each UPS would start to turn on, after turning on, the UPSs should work parallel in the Line mode.

7. Trouble Shooting

If the UPS system does not operate correctly, first check the operating informationon the LCD display.

Please attempt to solve the problem using the table below.If the problem still persists, consult your dealer.

7.1 Trouble Shooting According To Warning Indication

Problem Displayed	Possible cause	Remedy
Read EEPROM Error	UPS internal fault	Consult dealer.
EPO Active	EPO connector is open	Check the EPO connector status
On Maintain Bypass	Maintain bypass switch is open	Check the maintain bypass switch status
IP soft-start failed	UPS internal fault	Consult dealer
Site Wiring Fault	Phase and neutral conductor at input of UPS system are reversed	Reverse mains power wiring.
Battery Disconnect	Battery pack is not connected correctly	Do the battery test to confirm. Check the battery bank is connected to the UPS. Check the battery breaker is turn on.
Battery low	Battery voltage is low	When audible alarm sounding every second, battery is almost empty.
Output Overload	Overload	Check the loads and remove some non-critical loads. Check if some loads are failed.
Fan Failure	Fan abnormal	Check if the fan is running normally.
Charger Fail	The charge fails	Consult dealer.
Battery Over Voltage	Battery voltage is higher than normal value	Check if the battery quantity is right.

Problem Displayed	Possible cause	Remedy
Over Charge	Battery is over charged	The UPS will turn off the charger until the battery voltage is normal
Model Pin Error	UPS internal fault	Consult dealer.
Ambient Over Temperature	The ambient temperature is too high	Check the environment ventilation.
Heatsink Over Temperature	Inside temperature of UPS is too high	Check the ventilation of UPS and the ambient temperature.
Ambient NTC abnormal	UPS internal fault	Consult dealer.
Para Cable Male Loss	The parallel cable is disconnected	Check the parallel cable.
Para Cable Female Loss	The parallel cable is disconnected	Check the parallel cable.
Para Bat Differ	The battery packs of some UPSs are disconnected	Check if all the battery pack is connected.
Para Line Differ	The mains input of some UPSs is disconnected	Check the building wiring and input cable. Check if the input breaker is closed. Ensure the UPSs are connected to same input source.
Para Work Mode Differ	There are different power strategy setting in parallel system	The UPSs with different power strategy setting (Ex. one Line mode and one Converter mode) are forbidden to parallel.
Para Rate Power Differ	There are different UPSs in parallel system	The UPSs with different capacity (Ex. one 6KVA and one 10KVA) are forbidden to parallel.
ECO In Para	HE function is enabled in parallel system	HE function is forbidden in parallel system.
IP Fuse Open	Input fuse break	Check the input fuse status

7.2Trouble Shooting According To Fault Indication

Problem Displayed	Possible cause	Remedy
Inv Overload Fault	Overload	Check the loads and remove some non-critical loads. Check if some loads are failed.
Byp Overload Fault	Overload	Check the loads and remove some non-critical loads. Check if some loads are failed.
Output Short Circuit	Output short circuit	Remove all the loads. Turn off the UPS. Check if UPS output and loads is short circuit. Ensure short circuit is removed before turning on again.
Heatsink Over Temperature Fault	Inside temperature of UPS is too high	Check the ventilation of UPS and the ambient temperature.
Bus Over Voltage	UPS internal fault	Consult dealer.
Bus Under Voltage	UPS internal fault	Consult dealer.
Bus Unbalance	UPS internal fault	Consult dealer.
Bus short	UPS internal fault	Consult dealer.
Bus Softstart Fail	UPS internal fault	Consult dealer.
Inv Over Voltage	UPS internal fault	Consult dealer.
Inv Under Voltage	UPS internal fault	Consult dealer.
Inv Softstart Fail	UPS internal fault	Consult dealer.
Negative Power Fault	The load is pure inductive and capacitive	Remove some non-critical loads. Bypass supplies the load first, ensure there is no overload, then turn on UPS.
Cable male and female Loss fault	The parallel cable is disconnected	Check the parallel cable.
Fan lock fault	Fan blocked or disconnected over time	Check the fan status
Back Feed	Output voltage is returned to input	Consult dealer

7.3 Trouble Shooting In Else Cases

Problem	Possible cause	Remedy
No indication, no warning tone even though system is connected to mains power supply	No input voltage	Check the building wiring and input cable. Check if the input breaker is closed.
BYPASS LED light up even though the power supply is available	Inverter not switched on	Press On-Switch "I" to turn on UPS.
BATTERY LED lights up, and audible alarm sounding every 1 beep in every 4 seconds	Input voltage and/or frequency are out of tolerance	Check input power source. Check the building wiring and input cable. Check if the input breaker is closed.
Emergency supply period shorter than nominal value	Batteries not fully charged / batteries defect	Charge the batteries for at least 12 hours and then check capacity.

Please have the following information at hand before calling the After-Sales Service Department:

1. Model number, serial number
2. Date on which the problem occurred
3. LCD/LEDdisplay information, Buzzer alarm status
4. Mainspower condition, load type and capacity, environment temperature, ventilation condition
5. The information (battery capacity, quantity) of external battery pack if theUPS is "S" model
6. Other information for complete description of the problem

8. Battery Maintenance

Battery replacement should be performed by qualified personnel.

- This series UPS only requires minimal maintenance. The battery used for standard models are value regulated sealed lead-acid maintenance free battery. These models require minimal repairs. The only requirementis to charge the UPS regularly in order to maximize the expected life of the battery. When being connected to the mainspower, whether the UPS is turned on or not, the UPS keeps charging the batteries and also offers the protective function of overcharging and over-discharging.
- The UPS should be charged once every 4 to 6 months if it has not been used for a long time.
- In the regions of hot climates, the battery should be charged and discharged every 2 months. The standard charging time should beat least 12 hours.
- Under normal conditions, the battery life lasts 3 to 5 years. In case if the battery is found not in good condition, earlier replacement should be made.
- Replace batteries with the same number and same type of batteries.
- Do not replace the battery individually. All the batteries should be replaced at the same time following the instructions of the battery supplier.
- If the battery service life (3~5 years at 25°C ambient temperature) has been exceeded, the batteries must be replaced.

9. Communication Port

9.1 USB Interface

The USB port is compliance with USB 1.1 protocol for its communication software.

9.2 Dry contact Interface

Thisseries UPS has independent dry contactinterface. Please contact your local distributor for details. The following is the pin assignment and description of DB-9 connector.

Pin #	Description	I/O	Pin #	Description	I/O
1	UPS Fail	Output	6	Bypass	Output
2	Summary Alarm	Output	7	Battery Low	Output
3	GND	Input	8	UPS ON	Output
4	Remote Shutdown	Input	9	Line Loss	Output
5	Common	Input			

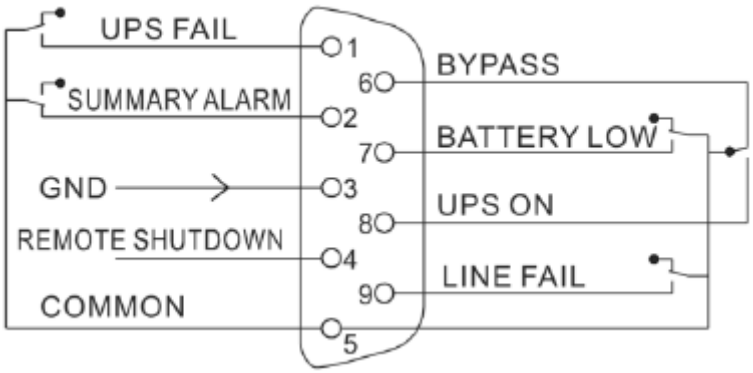

9.3 3RS-232 Interface（optional）

The RS-232 port is available for UPS monitoring, control, and firmware updates.

The cable pins for the RS-232 communication port are identified in the following illustration.

RS-232 communication port pin assignments:

Pin	Signal name	Function	Direction from the UPS
1		Unused	Not applicable
2	Tx	Transmit to external device	Out
3	Rx	Receive from external device	In
4		Unused	Not applicable
5	GND	Signal common	Not applicable
6		Unused	Not applicable
7		Unused	Not applicable
8		Unused	Not applicable
9		Unused	Not applicable

9.4 Intelligent slot

This series is equipped with anintelligent slot for other optional cardto achieve remote management of the UPS through internet / intranet.

Please contact your local distributor for further information.

10. Software

Free Software Download –WinPower

WinPower is a UPS monitoring software, which provides user-friendly interface to monitor and control UPS. This unique software provides safely auto shutdown for multi-computer systems while power failure. With this software, users can monitor and control any UPSon the same LAN, which communicated with local computer through RS232 or USB protocol,no matter how far from the UPSs.

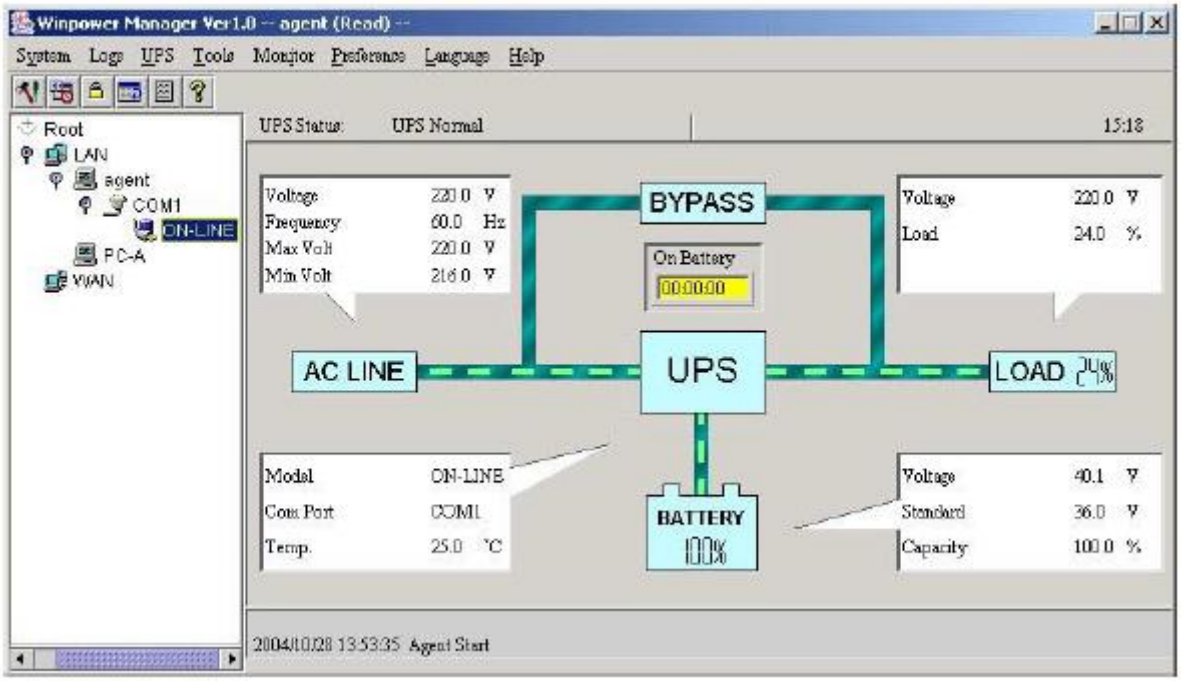

Installation procedure:

1. Go to the website:

http://www.ups-software-download.com/

2. Choose the operation system you need and follow the instruction described on the website to download the software.

3. When downloading all required files from the internet, enter the serial No: **511C1-01220-0100-478DF2A**to install the software.When thecomputer restarts,the WinPower software will appear as a green plug icon located in the system tray, near the clock.